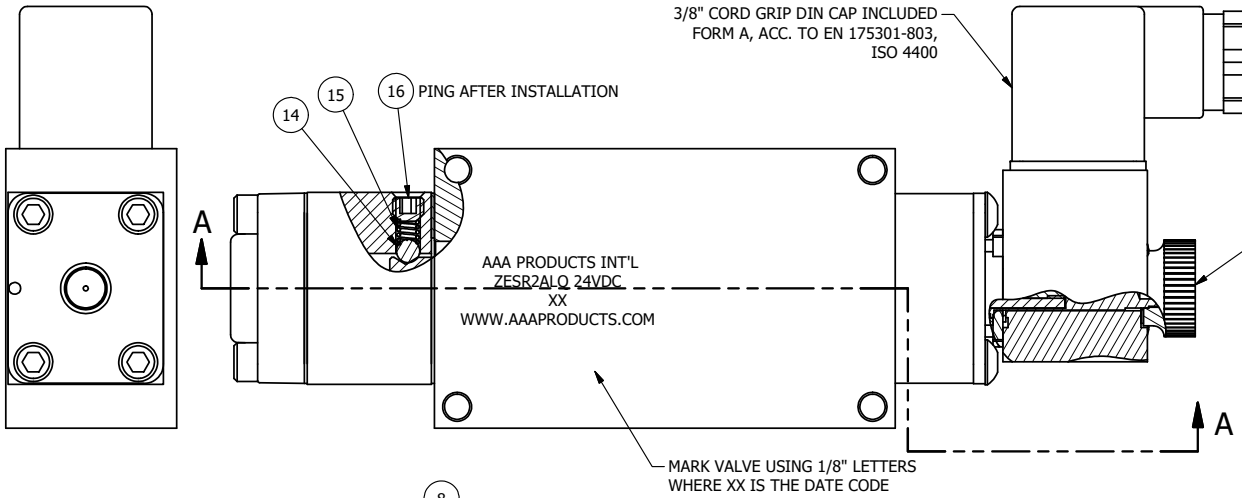

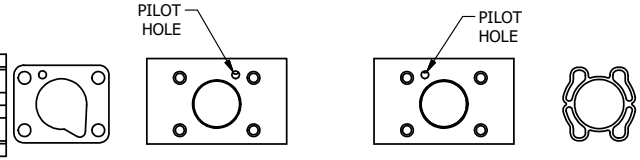

POSITION GASKET TO SEAL PILOT HOLE
SIDE 'B' ONLY.

ALIGN PILOT AND SLOT IN ADAPTOR
WITH GASKET IN BETWEEN SIDE 'A' ONLY
FOR EXTERNAL PILOT OPERATION - ROTATE ADAPTOR
180 DEGREES. REMOVE 1/8" NPTF PLUG AND
SUPPLY 50-150 PSI TO 1/8" NPTF PILOT PORT IN ADAPTOR.

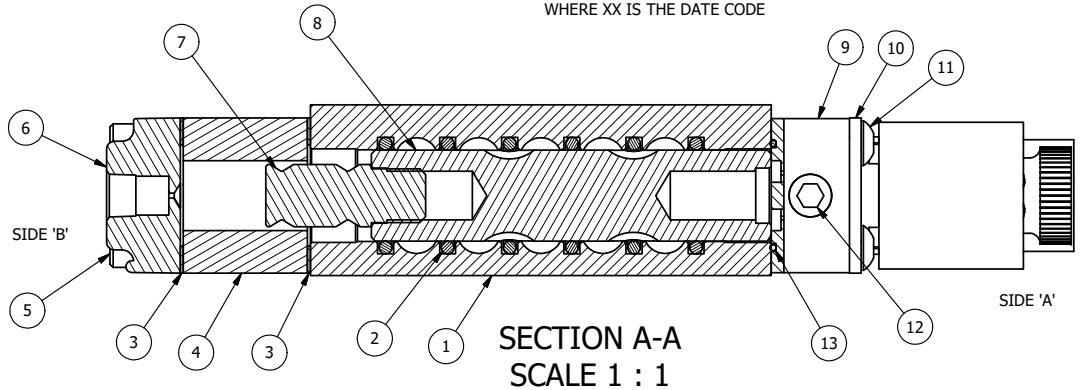

SECTION A-A
SCALE 1 : 1
VIEW FROM 3 PORT SIDE

FLG	QTY	PART NO	DESCRIPTION
17	1	V-567W	E SERIES SINTERED BRONZE MUFFLER, DUST EXCLUDER, V-613 LOCK WASHER
16	1	V-21-SS	SCREW, 1/4-20 X 3/16, SOCKET SET, CUP POINT, 18-8 SS
15	1	DS3-1	SPRING, DETENT, STAINLESS, 1/4" & 3/8" VALVE. LEE SPRING # LC 029B 0 S.
14	1	V-14	BALL, CHROME STEEL 3/16 DIA, GRADE 25, FOR DETENT
13	1	EMG3	GASKET - END MOUNT SOLENOID, BUNA-N, 1/4" & 3/8" VALVES
12	1	V-19-SS	PLUG, SOCKET PIPE 1/8"-27 NPT, 7/8 TAPER, PLAIN, FLUSH SEAL, STAINLESS STEEL
11	4	V-584	SCREW, 10-24 X 1, BUTTON HEAD SOCKET CAP WITH MICROSPHERE APPLIED TO THREADS.
10	1	SEC3-7	PLATE, RE-INFORCEMENT, SOLENOID, STAMPED, 304 STAINLESS
9	1	V-564	SYSTEM 8 INTRINSICALLY SAFE SOLENOID OPERATOR.
8	1	S3R	SPOOL - SOLID, STANDARD, 2 POS, CLSD CTR, 1/4" & 3/8" VALVE
7	1	PBS3-13-SS	STUD - POS. A & C. DETENT, STAINLESS STEEL, 1/4" & 3/8" VALVE
6	1	PEC3-11	END CAP, PILOT, STAINLESS STEEL, 1/4" & 3/8" VALVE
5	4	V-614-SS	SCREW, 10-24 X 1-3/4", SOCKET HEAD CAP, 18-8 SS
4	1	PEC3-18-Z	END CAP, SPACER, DETENT, SOLENOID, 360 BRASS, 1/4" & 3/8" VALVES
3	2	ECG3	GASKET - END CAP, 1/4" & 3/8" VALVE
2	6	V-39	O-RING, VITON, STD BODY, 1/4" & 3/8" VALVES
1	1	ZB2-1	BODY - BRASS, UPPER PILOTS (BUTTON BLEEDER), 1/4" SIDE PORT VALVE

NOTES:
1) ALWAYS GIVE VALVE MODEL AND PART NUMBER WHEN ORDERING PARTS.
2) LUBRICATE DETENT BALL, SPRING AND STUD.

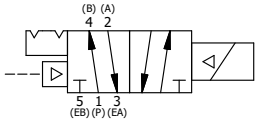

LIMITS ON DIMENSIONS UNLESS OTHERWISE SPECIFIED
2-PL DECIMAL ± .01
3-PL DECIMAL ± .005
FRACTIONAL ± 1/64
ANGULAR ± 1/2'

AAA PRODUCTS INTERNATIONAL
7114 Harry Hines Blvd
Dallas, TX 75235

DRAWN: RMcKenna	DATE: 11/13/2019	CHECKED: KWaite	DATE: 11/13/2019
SCALE: 1 : 1	SHEET: 1 OF 1	RELEASED: HWomack	DATE: 11/13/2019

TITLE:
1/4" SIDE PORT, SNGL SOL, 2 POS, DETENT, PILOT RTRN, BRASS & SS, INTRINSICALLY SAFE, 24VDC

PART NO.: ZESR2ALQ 24VDC

REV.:

THE INFORMATION CONTAINED WITHIN THIS DOCUMENT IS PROPRIETARY TO AAA PRODUCTS AND MAY NOT BE DISCLOSED WITHOUT PRIOR WRITTEN CONSENT

D:\Engineering\Product\Valve\Assembly\Standard\SS\DWG\ZESR2ALQ 24VDC.dw